TRIM YOUR SKYWRITER UFO:
Based on the speed of flight, the scrolling direction and speed of the words will need to be adjusted for easier viewing. It is always easier to view the words when the UFO is hovering at a constant height and speed. To adjust the text speed, press the "◄" or "►" buttons accordingly. If the word is scrolling too quickly to the right, tap the "◄" button until the desired scrolling speed is attained. If the word is scrolling too quickly to the left, press the "►" button until the desired scrolling speed is attained.

IMPORTANT: YOUR SKYWRITER UFO is extremely sensitive to throttle movements. When flying your SKYWRITER UFO always make small, smooth, slow, consistent movements up or down on the throttle stick. Try not to use quick and jerky movements on the throttle as this will cause the SKYWRITER UFO to fly out-of-control.

TROUBLESHOOTING

PROBLEM	SOLUTION
SKYWRITER UFO does not respond to controller	1) Make sure the SKYWRITER UFO is fully charged and the batteries in your controller are new 2) Turn your controller and SKYWRITER UFO off and then on again to reset the connection between the two devices. 3) Make sure there is no signal interference caused by being outdoors, in direct sunlight or under an intense light source like a spotlight, halogen light or track light directly over the toy and/or controller. 4) Make sure there is nothing blocking the infrared window on the controller and that no paint or decals have been added to the SKYWRITER UFO body. This could result in signals being blocked.
UFO is flying erratically or is unable to achieve lift off	1) Make sure that the connecting rods are intact and not broken. 2) Make sure that no hair or carpet fiber is stuck in the metal rotor shaft or gears. If you find hair carefully remove it with a tweezer. Never run or wash your UFO under water. See Care and Maintenance instructions.
Controller POWER LED LIGHT keeps flashing	1) Push the throttle all the way up and then pull the throttle all the way down.
Low battery indicator LIGHT keeps flashing	1) Simply change the batteries in your controller.

REPLACING CONNECTING ROD

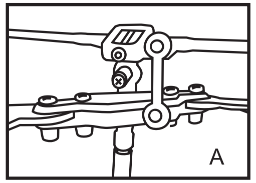

There are four propeller connecting rods on the upper and bottom propeller.

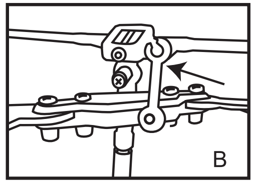

Broken connecting rod

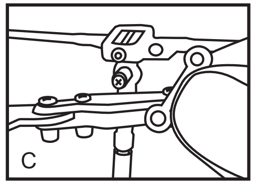

Replacing connecting rod

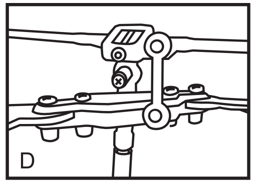

Proper connection

BATTERY WARNINGS

RECHARGEABLE BATTERY:
This UFO uses an internal Li-poly rechargeable battery that is not replaceable. If battery no longer stays charged, dispose of battery properly according to local disposal requirements.

CONTROLLER BATTERIES:
Remote control requires 4 “AA” batteries (not included). Please read the important battery safety warnings below.

- Do not mix alkaline, standard (carbon-zinc) and rechargeable batteries (Nickel Metal Hydride).
- Do not mix old and new batteries.
- Non-rechargeable batteries are not to be recharged.
- Rechargeable batteries are to be removed from the controller before being charged (if removable).
- Rechargeable batteries are only to be charged under adult supervision.
- Exhausted batteries should be removed immediately and must be recycled or disposed of properly according to state or local government ordinances and regulations.
- The supply terminals are not to be short-circuited.
- Only batteries of the same or equivalent type as recommended are to be used.
- Batteries are to be inserted with the correct polarity.
- Do not dispose batteries in a fire-batteries may leak or explode.

CARE AND MAINTENANCE

- Always remove the batteries from the wireless infrared remote control when it is not being used for an extended period of time.
- To clean, gently wipe the remote control and UFO with a clean damp cloth.
- Keep the toy away from direct heat or sunlight.
- Do not submerge the toy in water. This can damage the unit beyond repair.
- Parental guidance recommended when installing or replacing the batteries.

FCC Part 15 B Notice

CAUTION: Changes or modifications not expressly approved by the party responsible for compliance could void the user’s authority to operate the equipment.

NOTE: This equipment has been tested and found to comply with the limits for a Class B digital device, pursuant to Part 15 of the FCC Rules. These limits are designed to provide reasonable protection against harmful interference in a residential installation. This equipment generates, uses and can radiate radio frequency energy and, if not installed and used in accordance with the instructions, may cause harmful interference to radio communications. However, there is no guarantee that interference will not occur in a particular installation. If this equipment does cause harmful interference to radio or television reception, which can be determined by turning the equipment off and on, the user is encouraged to try to correct the interference by one or more of the following measures:

- Reorient or relocate the receiving antenna.
- Increase the separation between the equipment and receiver.
- Connect the equipment into an outlet on a circuit different from that to which the receiver is connected.
- Consult the dealer or experienced radio/TV technician for help.

This device complies with Part 15 of the FCC Rules. Operation is subject to the following two conditions :
(1) this device may not cause harmful interference, and
(2) this device must accept any interference received, including interference that may cause undesired operation.

©2012 Rooftop Brands™ All rights reserved Patent Pending
Conforms to safety requirements ASTM, CPSIA and FCC.
Tel: + (1) 949-566-9573 • www.rooftopbrands.com

⚠WARNING!
CHOKING HAZARD - Small parts. Not for children under 3 years.

PROPEL RC

SKYWRITER UFO™

THE SCROLLING MESSAGE HELICOPTER

WARNING: SKYWRITER UFO™ is an indoor, infrared flying toy. Infrared signals cannot function in daylight due to interference from the sun. In addition, your SKYWRITER UFO™ is not suited to handle wind or other outdoor environmental conditions. Attempting to fly this toy outdoors may lead to severe damage.

USER MANUAL

Please read this instruction manual as it contains valuable information on how to properly fly and care for your SKYWRITER UFO.

Product may vary slightly from photograph

UFO DIAGRAM

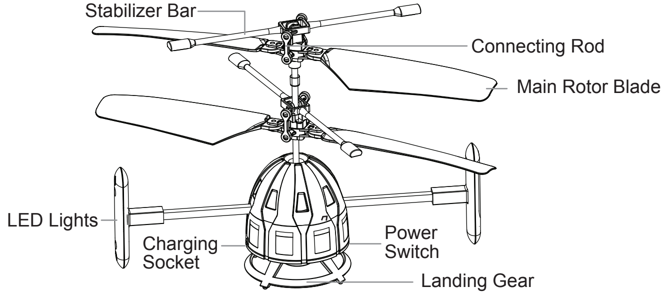

REMOTE DIAGRAM

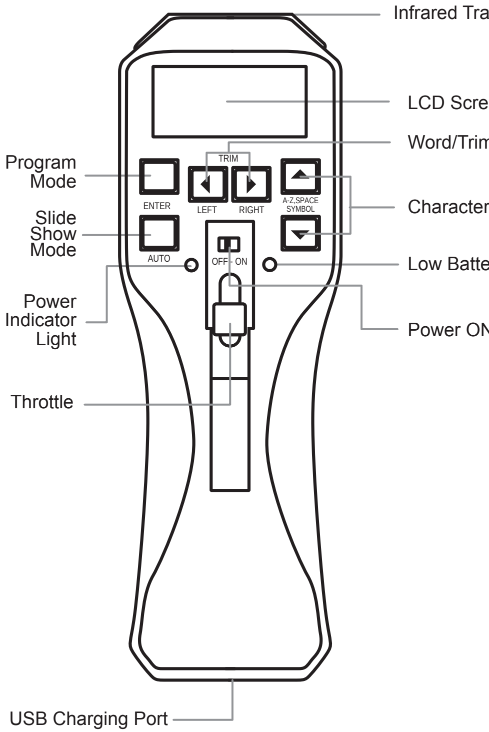

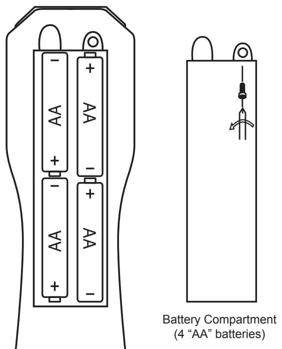

Diagram A

CONTROLLER BATTERY INSTALLATION

1. Remove the battery cover from the remote control.
2. Install 4 new “AA” alkaline batteries (see diagram A).
3. Replace the battery cover.

CHARGING THE UFO

The SKYWRITER UFO should be charged using the included USB cable only. Use the included charging cable with either your computer or the included controller.

1. Make sure the SKYWRITER UFO power switch is set to the OFF position. All lights and propellers should be off. Make sure the controller's power switch is set to OFF as well.
2. Connect the round charging pin on the included USB charging cable to the socket on the side of the SKYWRITER UFO (See diagram B).
3. **With Computer**: Plug the open end of the USB cable into an open USB port on your computer. Make sure your computer is turned on to begin charging.
   With Controller: If using controller to charge, the open end of the USB cable should be plugged into the USB socket at the base of the controller (See diagram B). Turn on the controller to begin charging (See diagram C).
4. The USB plug lights red when charging is complete. During charging, the USB plug does not light up. (See diagram D).
   USB charging time may vary depending on the amount of charge needed to fill the SKYWRITER UFO battery. The average USB charging time is about 20 minutes.

Diagram B

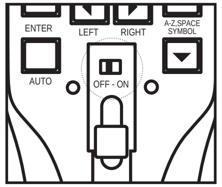

Diagram C

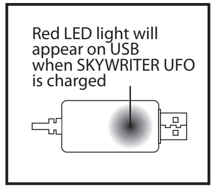

Diagram D

NEVER USE ANY OTHER USB CABLE OR ADAPTER TO CHARGE YOUR SKYWRITER UFO AS THIS MAY DAMAGE YOUR BATTERY AND SHORTEN THE LIFE OF THE PRODUCT.

HOW TO USE THE CONTROLLER

• Verify that there are 4 “AA” batteries inside the infrared remote control unit (see diagram A).

1. Switch ON the controller. The Green POWER Indicator should flash. Push the throttle all the way up and then slide it all the way down. The Green POWER Indicator should now glow in a solid GREEN. This indicates that the controller is ready for flight.
   Note: Upon turning ON the controller, a quick BOOTUP display will show on the LCD screen. This should last for one or two seconds and is normal.
2. Editing functions:
   Your SkyWriter UFO can store up to 20 entries (words), with each entry being up to 7 characters long. (Actually, since spaces are also allowed, you could have more than one word per entry, such as “BIG DOG”.)
   Use the "▲" and "▼" buttons to select which entry to edit. A number at the bottom-center of the displays shows the number of the entry. When you reach the entry (word) number you wish to edit, press the PROGRAM button once to enter the Program Mode. The first character of the entry will display a flashing cursor. Use the "▲" and "▼" buttons to select the desired character, and the "►" and "◄" to move to the next or previous character of the current entry. Press the PROGRAM button again to save your changes to this entry and exit Program Mode.
   Character sequence is: “A - Z”, “0-9”, “+ - × ÷ = ❤!? \ \ / / _ / ◄ ► (space)”
3. BLANK Mode allows you to Erase the current word. First make sure you are in Program Mode; you should see a flashing cursor. Next, hold down the "◄" button for two seconds. The LCD Screen will flash rapidly between "BLANK" and "Y / N". Press the "◄" button to select "Y" and delete the current entry. Pressing the "►" button will select "N" and cancel the Delete action.
4. SLIDE SHOW Mode:
   In Slide Show Mode, the UFO will automatically switch between entries every 5 seconds, starting with the currently selected entry. The controller's LCD will also show display the entries in sync with the UFO's display. Use this feature to sequentially display entire phrases or sentences.
   NOTE: The slide show will start over upon encountering the first blank entry, regardless of whether there are non-blank entries after the blank one.
   To activate Slide Show Mode, be sure you are not in Program Mode and press the AUTO button. The entry number will blink. To exit Slide Show Mode, press the AUTO button again. The entry number will stop blinking.
5. RESET Memory:
   The user can Reset the memory and Blank all stored entries. To do this, make sure the controller and UFO are both in the OFF mode. Holding down the SLIDES key, now turn ON the controller. The LCD screen will flash rapidly between "RESET" and "Y / N". Press the "◄" button to select "Y" and Reset the memory. Pressing the "►" button will select "N" and cancel the Reset action.
6. LOW BATTERY INDICATOR LIGHT:
   The low battery indicator light located on the right side of the throttle button will notify you when it is time to change the batteries. If the battery power becomes too low, a flashing RED LED indicator light will appear. If this happens simply change the batteries in your controller.

PREPARATION

• Verify that there are 4 “AA” batteries inside the infrared remote control unit (see diagram A) and that the SKYWRITER UFO has been fully charged.
• Make sure your SKYWRITER UFO is turned ON.
• Make sure the room has no obstacles and the highest ceiling possible.

NOTE: ONLY ONE UFO CAN FLY IN THE SAME ROOM AT THE SAME TIME

FLYING YOUR SKYWRITER UFO

TAKING OFF: There are two ways to safely launch your SKYWRITER UFO. Though it is recommended to always launch your product by placing it on a smooth, level surface, you may also launch it safely from your hand. See Diagram E below. Be sure to keep the blade system clear of your fingers or anything else before flying.

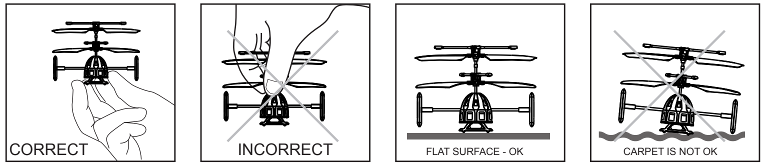

Diagram E

HOVERING YOUR SKYWRITER UFO:
Start to fly your SKYWRITER UFO by slowly and consistently pushing upward with your thumb on the center throttle stick. This will cause your SKYWRITER UFO to ascend. Slowly pushing down with your thumb will cause your SKYWRITER UFO to descend. Practice hovering in the center of the room by making small up/down adjustments on your throttle stick. Remember practice makes perfect!

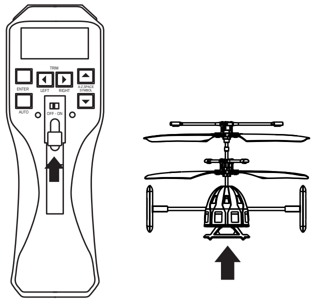

Move the throttle control UP to increase the speed of the main rotor blade and the SKYWRITER UFO will ascend.

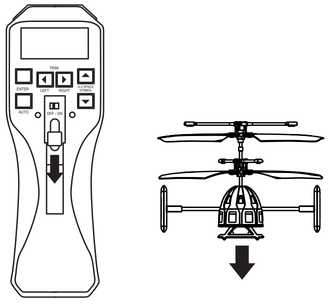

Move the throttle control DOWN to decrease the speed of the main rotor and the SKYWRITER UFO will descend.